Integrated Silicon Pressure Sensor On-Chip Signal Conditioned, Temperature Compensated and Calibrated

MPXV7002 SERIES

INTEGRATED PRESSURE SENSOR
-2 to 2 kPa (-0.3 to 0.3 psi)
0.5 to 4.5 V OUTPUT

The MPXV7002 series piezoresistive transducers are state-of-the-art monolithic silicon pressure sensors designed for a wide range of applications, but particularly those employing a microcontroller or microprocessor with A/D inputs. This transducer combines advanced micromachining techniques, thin-film metallization, and bipolar processing to provide an accurate, high level analog output signal that is proportional to the applied pressure.

Features

- 2.5% Typical Error over +10°C to +60°C with Auto Zero
- 6.25% Maximum Error over +10°C to +60°C without Auto Zero
- Ideally Suited for Microprocessor or Microcontroller-Based Systems
- Thermoplastic (PPS) Surface Mount Package
- Temperature Compensated over +10° to +60°C
- Patented Silicon Shear Stress Strain Gauge
- Available in Differential and Gauge Configurations

Typical Applications

- Hospital Beds
- HVAC
- Respiratory Systems
- Process Control

SMALL OUTLINE PACKAGE

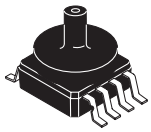

MPXV7002GC6U
CASE 482A-01

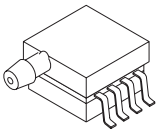

MPXV7002GP
CASE 1369-01

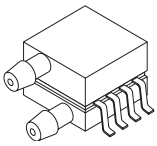

MPXV7002DP
CASE 1351-01

ORDERING INFORMATION					
Device Type	**Options**	**Case No.**	**MPX Series Order No.**	**Packing Options**	**Device Marking**
Ported Elements	Gauge, Axial Port, SMT	482A	MPXV7002GC6U	Rails	MPXV7002G
	Gauge, Axial Port, SMT	482A	MPXV7002GC6T1	Tape & Reel	MPXV7002G
	Gauge, Side Port, SMT	1369	MPXV7002GP	Trays	MPXV7002G
	Differential, Dual Port, SMT	1351	MPXV7002DP	Trays	MPXV7002DP
	Differential, Dual Port, SMT	1351	MPXV7002DPT1	Tape & Reel	MPXV7002DP

SMALL OUTLINE PACKAGE PIN NUMBERS[1]			
1	N/C	5	N/C
2	V_S	6	N/C
3	Gnd	7	N/C
4	V_{out}	8	N/C

1. Pins 1, 5, 6, 7, and 8 are internal device connections. Do not connect to external circuitry or ground. Pin 1 is noted by the notch in the lead.

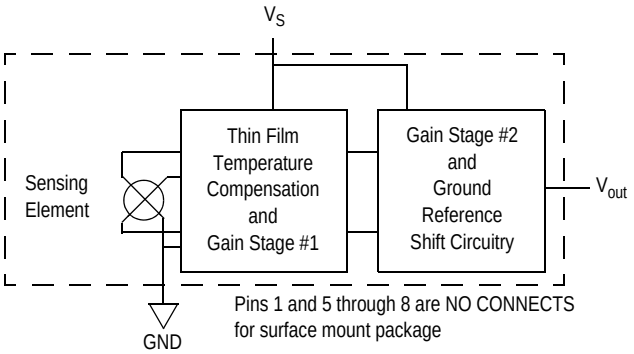

Figure 1. Fully Integrated Pressure Sensor Schematic

© Freescale Semiconductor, Inc., 2005, 2008. All rights reserved.

Table 1. Maximum Ratings[1]

Rating	Symbol	Value	Unit
Maximum Pressure (P1 > P2)	P_{max}	75	kPa
Storage Temperature	T_{stg}	–30 to +100	°C
Operating Temperature	T_A	10 to +60	°C

1. Exposure beyond the specified limits may cause permanent damage or degradation to the device.

Table 2. Operating Characteristics (V_S = 5.0 Vdc, T_A = 25°C unless otherwise noted. Decoupling circuit shown in Figure 3 required to meet specification.)

Characteristic		Symbol	Min	Typ	Max	Unit
Pressure Range[1]		P_{OP}	–2.0	—	2.0	kPa
Supply Voltage[2]		V_S	4.75	5.0	5.25	Vdc
Supply Current		I_o	—	—	10	mAdc
Pressure Offset[3] @ V_S = 5.0 Volts	(10 to 60°C)	V_{off}	2.25	2.5	2.75	Vdc
Full Scale Output[4] @ V_S = 5.0 Volts	(10 to 60°C)	V_{FSO}	4.25	4.5	4.75	Vdc
Full Scale Span[5] @ V_S = 5.0 Volts	(10 to 60°C)	V_{FSS}	3.5	4.0	4.5 V	Vdc
Accuracy[6]	(10 to 60°C)	—	—	±2.5[7]	±6.25	$\%V_{FSS}$
Sensitivity		V/P	—	1.0	—-	V/kPa
Response Time[8]		t_R	—	1.0	—-	ms
Output Source Current at Full Scale Output		I_{O+}	—	0.1	—-	mAdc
Warm-Up Time[9]		—	—	20	—-	ms

1. 1.0 kPa (kiloPascal) equals 0.145 psi.
2. Device is ratiometric within this specified excitation range.
3. Offset (V_{off}) is defined as the output voltage at the minimum rated pressure.
4. Full Scale Output (V_{FSO}) is defined as the output voltage at the maximum or full rated pressure.
5. Full Scale Span (V_{FSS}) is defined as the algebraic difference between the output voltage at full rated pressure and the output voltage at the minimum rated pressure.
6. Accuracy (error budget) consists of the following:
   - Linearity: Output deviation from a straight line relationship with pressure over the specified pressure range.
   - Temperature Hysteresis: Output deviation at any temperature within the operating temperature range, after the temperature is cycled to and from the minimum or maximum operating temperature points, with zero differential pressure applied.
   - Pressure Hysteresis: Output deviation at any pressure within the specified range, when this pressure is cycled to and from the minimum or maximum rated pressure, at 25°C.
   - TcSpan: Output deviation over the temperature range of 10° to 60°C, relative to 25°C.
   - TcOffset: Output deviation with minimum rated pressure applied, over the temperature range of 10° to 60°C, relative to 25°C.
   - Variation from Nominal: The variation from nominal values, for Offset or Full Scale Span, as a percent of V_{FSS}, at 25°C.
7. Auto Zero at Factory Installation: Due to the sensitivity of the MPXV7002 Series, external mechanical stresses and mounting position can affect the zero pressure output reading. Auto zero is defined as storing the zero pressure output reading and subtracting this from the device's output during normal operations. Reference AN1636 for specific information. The specified accuracy assumes a maximum temperature change of ± 5°C between auto zero and measurement.
8. Response Time is defined as the time for the incremental change in the output to go from 10% to 90% of its final value when subjected to a specified step change in pressure.
9. Warm-up Time is defined as the time required for the product to meet the specified output voltage after the Pressure has been stabilized.

ON-CHIP TEMPERATURE COMPENSATION, CALIBRATION AND SIGNAL CONDITIONING

The performance over temperature is achieved by integrating the shear-stress strain gauge, temperature compensation, calibration and signal conditioning circuitry onto a single monolithic chip.

Figure 2 illustrates the Differential or Gauge configuration in the basic chip carrier (Case 482). A gel die coat isolates the die surface and wire bonds from the environment, while allowing the pressure signal to be transmitted to the sensor diaphragm.

The MPXV7002 series pressure sensor operating characteristics, and internal reliability and qualification tests are based on use of dry air as the pressure media. Media, other than dry air, may have adverse effects on sensor performance and long-term reliability. Contact the factory for information regarding media compatibility in your application.

Figure 3 shows the recommended decoupling circuit for interfacing the integrated sensor to the A/D input of a microprocessor or microcontroller. Proper decoupling of the power supply is recommended.

Figure 4 shows the sensor output signal relative to pressure input. Typical, minimum, and maximum output curves are shown for operation over a temperature range of 10° to 60°C using the decoupling circuit shown in Figure 3. The output will saturate outside of the specified pressure range.

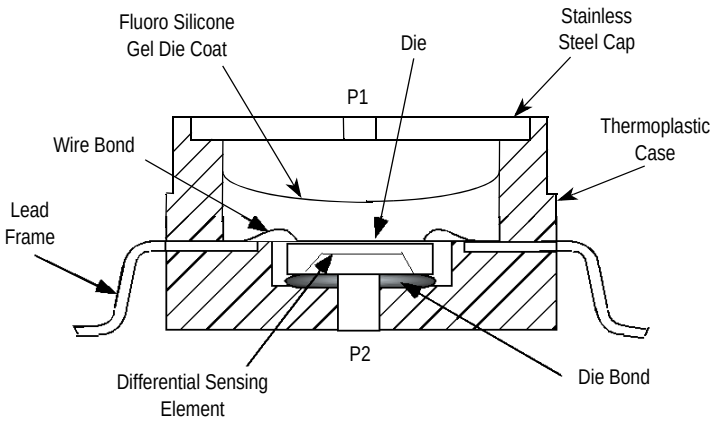

Figure 2. Cross-Sectional Diagram SOP (not to scale)

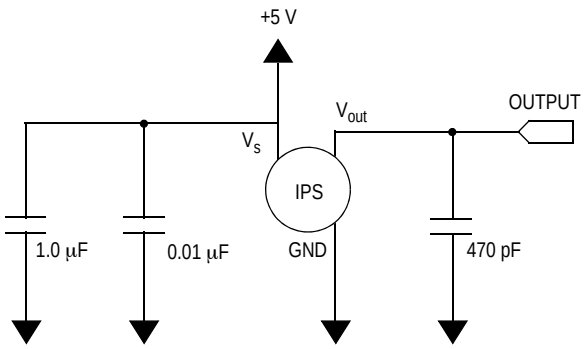

Figure 3. Recommended Power Supply Decoupling and Output Filtering
(For additional output filtering, please refer to Application Note AN1646.)

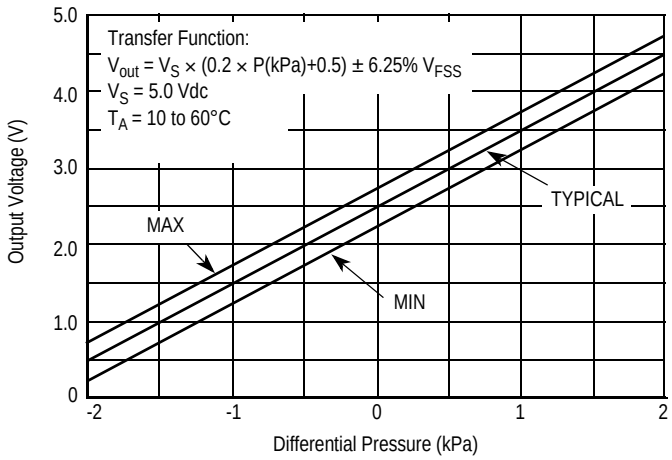

Figure 4. Output versus Pressure Differential

PRESSURE (P1)/VACUUM (P2) SIDE IDENTIFICATION TABLE

Freescale designates the two sides of the pressure sensor as the Pressure (P1) side and the Vacuum (P2) side. The Pressure (P1) side is the side containing a gel die coat which protects the die from harsh media.

The Pressure (P1) side may be identified by using the table below:

Part Number	Case Type	Pressure (P1) Side Identifier
MPXV7002GC6U/GC6T1	482A-01	Vertical Port Attached
MPXV7002GP	1369-01	Side with Port Attached
MPXV7002DP	1351-01	Side with Part Marking

MINIMUM RECOMMENDED FOOTPRINT FOR SURFACE MOUNTED APPLICATIONS

Surface mount board layout is a critical portion of the total design. The footprint for the surface mount packages must be the correct size to ensure proper solder connection interface between the board and the package. With the correct footprint, the packages will self align when subjected to a solder reflow process. It is always recommended to design boards with a solder mask layer to avoid bridging and shorting between solder pads.

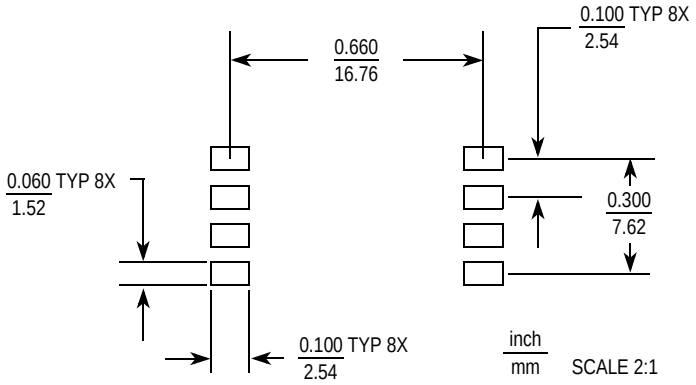

Figure 5. Small Outline Package Footprint

PACKAGE DIMENSIONS

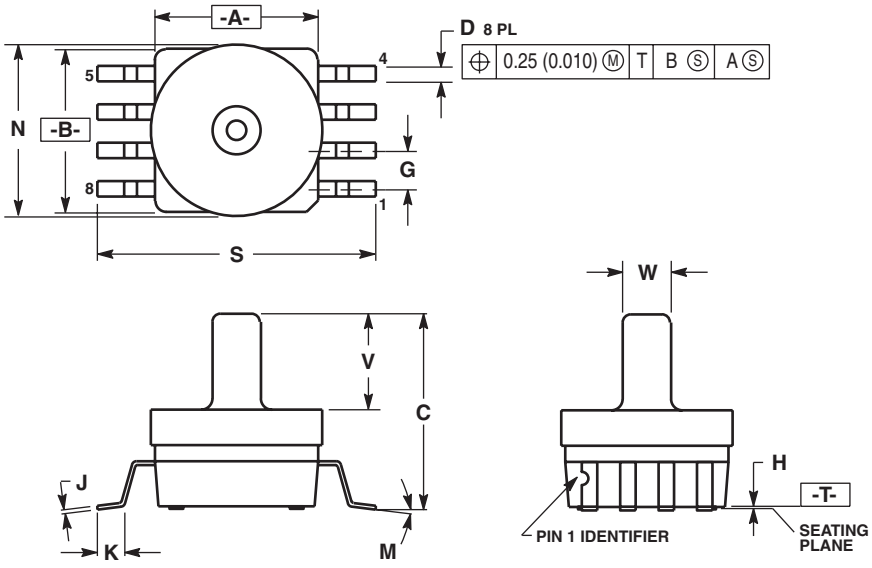

NOTES:
1. DIMENSIONING AND TOLERANCING PER ANSI Y14.5M, 1982.
2. CONTROLLING DIMENSION: INCH.
3. DIMENSION A AND B DO NOT INCLUDE MOLD PROTRUSION.
4. MAXIMUM MOLD PROTRUSION 0.15 (0.006).
5. ALL VERTICAL SURFACES 5˚ TYPICAL DRAFT.

	INCHES		MILLIMETERS	
DIM	MIN	MAX	MIN	MAX
A	0.415	0.425	10.54	10.79
B	0.415	0.425	10.54	10.79
C	0.500	0.520	12.70	13.21
D	0.038	0.042	0.96	1.07
G	0.100 BSC		2.54 BSC	
H	0.002	0.010	0.05	0.25
J	0.009	0.011	0.23	0.28
K	0.061	0.071	1.55	1.80
M	0˚	7˚	0˚	7˚
N	0.444	0.448	11.28	11.38
S	0.709	0.725	18.01	18.41
V	0.245	0.255	6.22	6.48
W	0.115	0.125	2.92	3.17

CASE 482A-01
ISSUE A
SMALL OUTLINE PACKAGE

PACKAGE DIMENSIONS

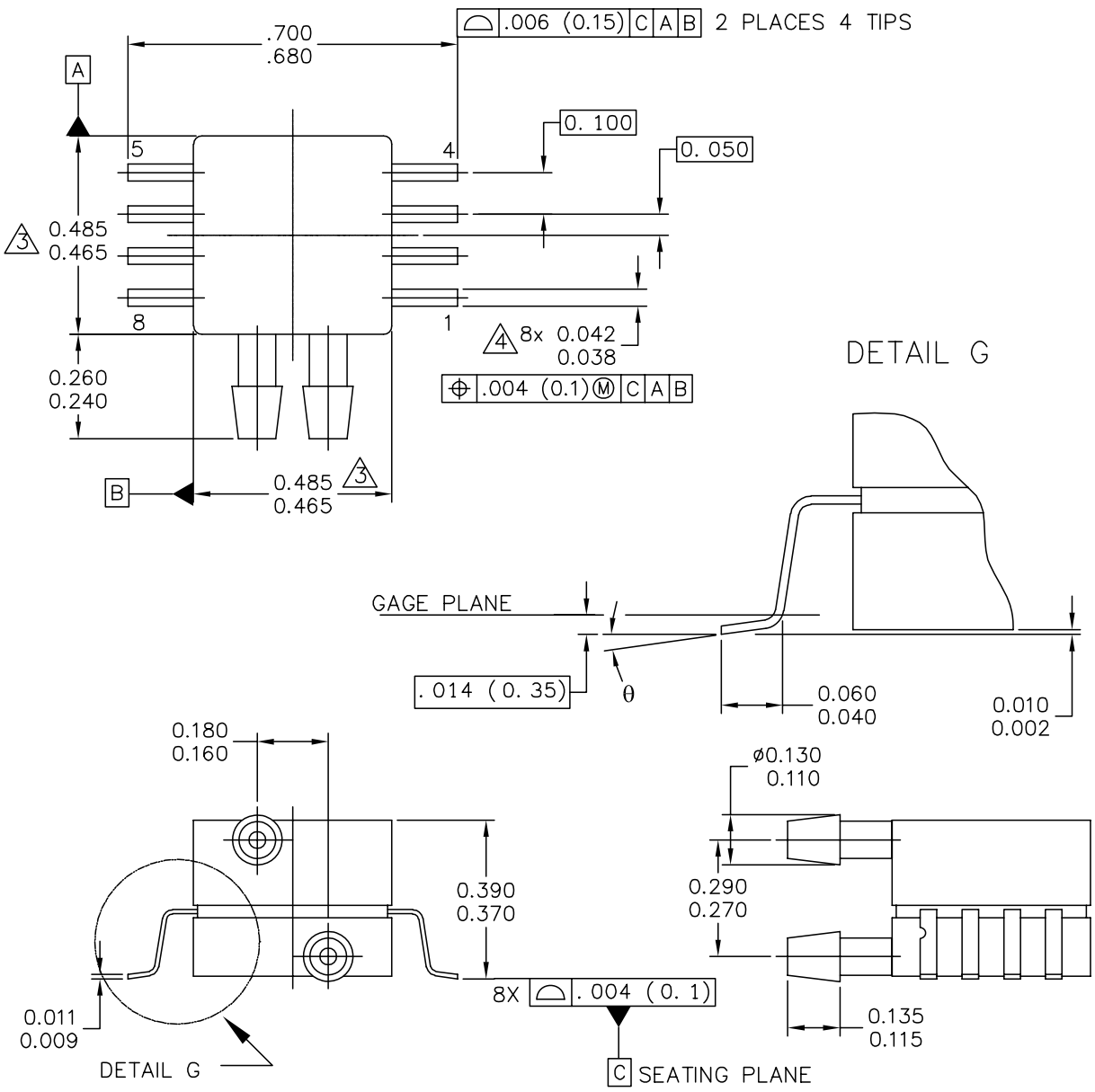

© FREESCALE SEMICONDUCTOR, INC. ALL RIGHTS RESERVED.	**MECHANICAL OUTLINE**	PRINT VERSION NOT TO SCALE
TITLE: 8 LD SNSR, DUAL PORT	DOCUMENT NO: 98ASA99255D	REV: A
	CASE NUMBER: 1351-01	27 JUL 2005
	STANDARD: NON-JEDEC	

PAGE 1 OF 2

CASE 1351-01
ISSUE A
SMALL OUTLINE PACKAGE

PACKAGE DIMENSIONS

NOTES:

1. CONTROLLING DIMENSION: INCH

2. INTERPRET DIMENSIONS AND TOLERANCES PER ASME Y14.5M–1994.

3. DIMENSIONS DO NOT INCLUDE MOLD FLASH OR PPROTRUSIONS.
MOLD FLASH AND PROTRUSIONS SHALL NOT EXCEED .006 PER SIDE.

4. DIMENSION DOES NOT INCLUDE DAMBAR PROTRUSION. ALLOWABLE DAMBAR PROTRUSION SHALL BE .008 MAXIMUM.

STYLE 1:	STYLE 2:
PIN 1: GND	PIN 1: N/C
PIN 2: +Vout	PIN 2: Vs
PIN 3: Vs	PIN 3: GND
PIN 4: –Vout	PIN 4: Vout
PIN 5: N/C	PIN 5: N/C
PIN 6: N/C	PIN 6: N/C
PIN 7: N/C	PIN 7: N/C
PIN 8: N/C	PIN 8: N/C

© FREESCALE SEMICONDUCTOR, INC. ALL RIGHTS RESERVED.	MECHANICAL OUTLINE	PRINT VERSION NOT TO SCALE
TITLE: 8 LD SNSR, DUAL PORT	DOCUMENT NO: 98ASA99255D	REV: A
	CASE NUMBER: 1351–01	27 JUL 2005
	STANDARD: NON–JEDEC	

PAGE 2 OF 2

CASE 1351-01
ISSUE A
SMALL OUTLINE PACKAGE

PACKAGE DIMENSIONS

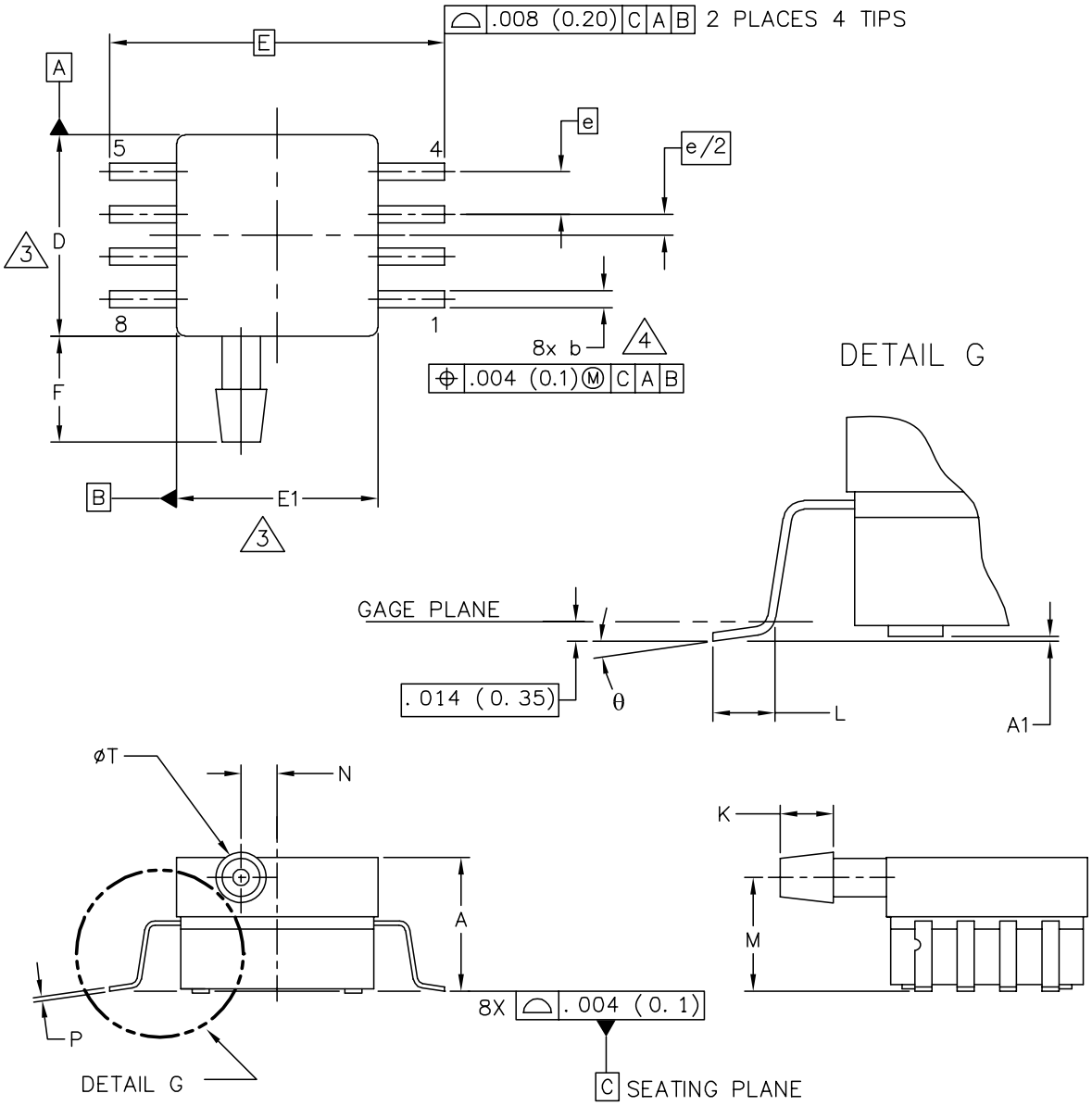

© FREESCALE SEMICONDUCTOR, INC. ALL RIGHTS RESERVED.	MECHANICAL OUTLINE	PRINT VERSION NOT TO SCALE
TITLE: 8 LD SOP, SIDE PORT	DOCUMENT NO: 98ASA99303D	REV: B
	CASE NUMBER: 1369-01	24 MAY 2005
	STANDARD: NON-JEDEC	

PAGE 1 OF 2

CASE 1369-01
ISSUE B
SMALL OUTLINE PACKAGE

PACKAGE DIMENSIONS

NOTES:
1. CONTROLLING DIMENSION: INCH

2. INTERPRET DIMENSIONS AND TOLERANCES PER ASME Y14.5M–1994.

3. DIMENSIONS DO NOT INCLUDE MOLD FLASH OR PPROTRUSIONS.
MOLD FLASH AND PROTRUSIONS SHALL NOT EXCEED .006 (0.152) PER SIDE.

4. DIMENSION DOES NOT INCLUDE DAMBAR PROTRUSION. ALLOWABLE DAMBAR
PROTRUSION SHALL BE .008 (0.203) MAXIMUM.

DIM	INCHES MIN	INCHES MAX	MILLIMETERS MIN	MILLIMETERS MAX	DIM	INCHES MIN	INCHES MAX	MILLIMETERS MIN	MILLIMETERS MAX
A	.300	.330	7.11	7.62	θ	0°	7°	0°	7°
A1	.002	.010	0.05	0.25	–	---	---	---	---
b	.038	.042	0.96	1.07	–	---	---	---	---
D	.465	.485	11.81	12.32	–	---	---	---	---
E	.717 BSC		18.21 BSC		–	---	---	---	---
E1	.465	.485	11.81	12.32	–	---	---	---	---
e	.100 BSC		2.54 BSC		–	---	---	---	---
F	.245	.255	6.22	6.47	–	---	---	---	---
K	.120	.130	3.05	3.30	–	---	---	---	---
L	.061	.071	1.55	1.80	–	---	---	---	---
M	.270	.290	6.86	7.36	–	---	---	---	---
N	.080	.090	2.03	2.28	–	---	---	---	---
P	.009	.011	0.23	0.28	–	---	---	---	---
T	.115	.125	2.92	3.17	–	---	---	---	---

© FREESCALE SEMICONDUCTOR, INC.
ALL RIGHTS RESERVED.

MECHANICAL OUTLINE | PRINT VERSION NOT TO SCALE

TITLE:	DOCUMENT NO: 98ASA99303D	REV: B
8 LD SOP, SIDE PORT	CASE NUMBER: 1369-01	24 MAY 2005
	STANDARD: NON-JEDEC	

PAGE 2 OF 2

CASE 1369-01
ISSUE B
SMALL OUTLINE PACKAGE

How to Reach Us:

Home Page:
www.freescale.com

Web Support:
http://www.freescale.com/support

USA/Europe or Locations Not Listed:
Freescale Semiconductor, Inc.
Technical Information Center, EL516
2100 East Elliot Road
Tempe, Arizona 85284
1-800-521-6274 or +1-480-768-2130
www.freescale.com/support

Europe, Middle East, and Africa:
Freescale Halbleiter Deutschland GmbH
Technical Information Center
Schatzbogen 7
81829 Muenchen, Germany
+44 1296 380 456 (English)
+46 8 52200080 (English)
+49 89 92103 559 (German)
+33 1 69 35 48 48 (French)
www.freescale.com/support

Japan:
Freescale Semiconductor Japan Ltd.
Headquarters
ARCO Tower 15F
1-8-1, Shimo-Meguro, Meguro-ku,
Tokyo 153-0064
Japan
0120 191014 or +81 3 5437 9125
support.japan@freescale.com

Asia/Pacific:
Freescale Semiconductor China Ltd.
Exchange Building 23F
No. 118 Jianguo Road
Chaoyang District
Beijing 100022
China
+86 010 5879 8000
support.asia@freescale.com

For Literature Requests Only:
Freescale Semiconductor Literature Distribution Center
P.O. Box 5405
Denver, Colorado 80217
1-800-441-2447 or +1-303-675-2140

Information in this document is provided solely to enable system and software implementers to use Freescale Semiconductor products. There are no express or implied copyright licenses granted hereunder to design or fabricate any integrated circuits or integrated circuits based on the information in this document.

Freescale Semiconductor reserves the right to make changes without further notice to any products herein. Freescale Semiconductor makes no warranty, representation or guarantee regarding the suitability of its products for any particular purpose, nor does Freescale Semiconductor assume any liability arising out of the application or use of any product or circuit, and specifically disclaims any and all liability, including without limitation consequential or incidental damages. “Typical” parameters that may be provided in Freescale Semiconductor data sheets and/or specifications can and do vary in different applications and actual performance may vary over time. All operating parameters, including “Typicals”, must be validated for each customer application by customer’s technical experts. Freescale Semiconductor does not convey any license under its patent rights nor the rights of others. Freescale Semiconductor products are not designed, intended, or authorized for use as components in systems intended for surgical implant into the body, or other applications intended to support or sustain life, or for any other application in which the failure of the Freescale Semiconductor product could create a situation where personal injury or death may occur. Should Buyer purchase or use Freescale Semiconductor products for any such unintended or unauthorized application, Buyer shall indemnify and hold Freescale Semiconductor and its officers, employees, subsidiaries, affiliates, and distributors harmless against all claims, costs, damages, and expenses, and reasonable attorney fees arising out of, directly or indirectly, any claim of personal injury or death associated with such unintended or unauthorized use, even if such claim alleges that Freescale Semiconductor was negligent regarding the design or manufacture of the part.

Freescale™ and the Freescale logo are trademarks of Freescale Semiconductor, Inc. All other product or service names are the property of their respective owners.
© Freescale Semiconductor, Inc. 2008. All rights reserved.

MPXV7002
Rev. 1.0
09/2008